3D Puzzle
POP Out World ®

SP06-0108

Ford Model T

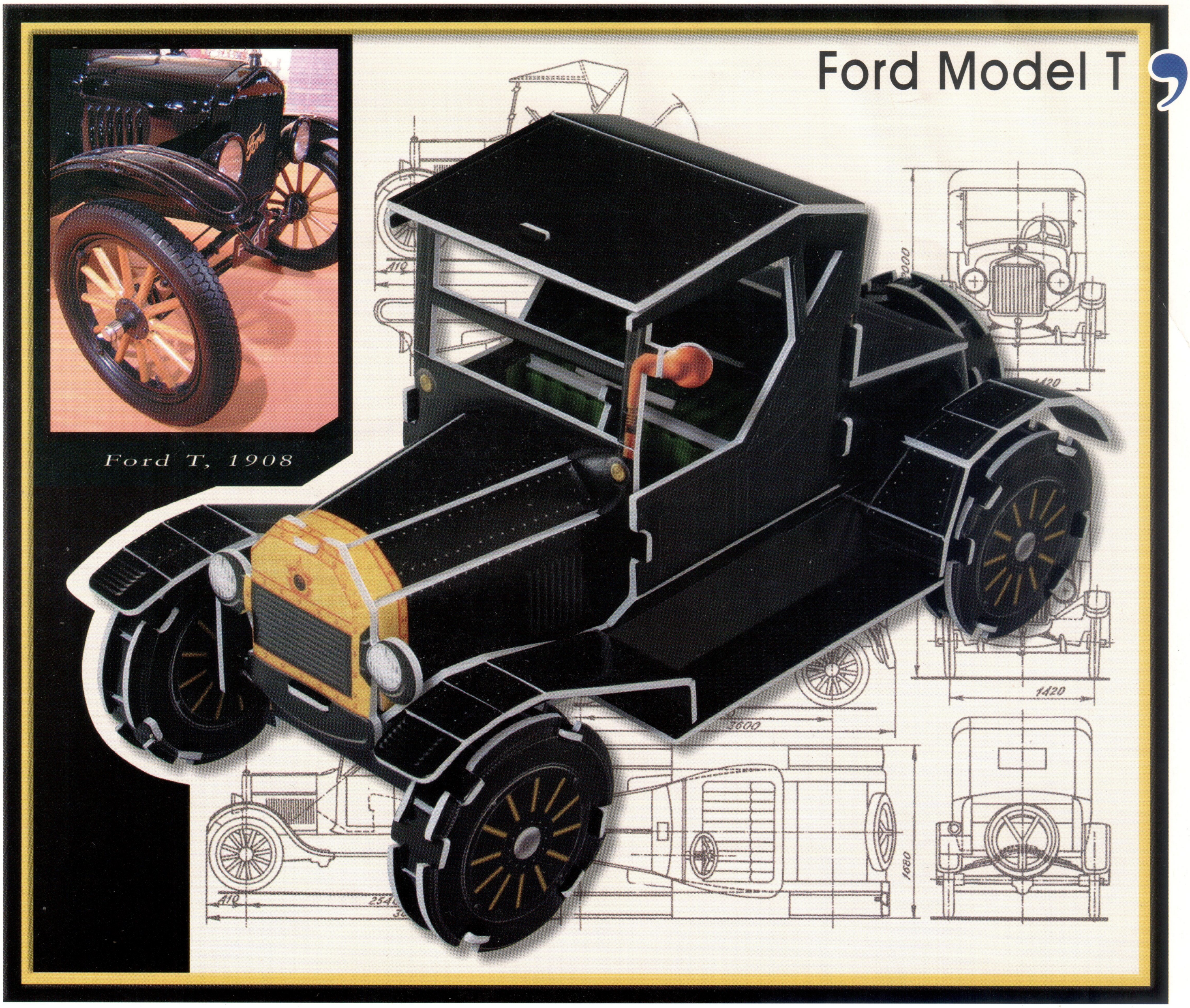
Ford T, 1908

No Glue No Tools
Easy to Assemble
Educational
Great Decoration Item

36 PCS

Ages 8+

- Assembled size: 160 × 82 × 95(mm) / 6.3″ × 3.2″ × 3.7″
- POP OUT WORLD made of paper and polystyrene foam board complies with CPSC Standards, ASTM F963 Standards and CE.
- All works are the sole property of InterPr Inc. All rights reserved.
- InterPr Inc. acquired ISO 9001 and ISO 14001.

SCHOLAS

CE

WARNING:
CHOKING HAZARD - Small parts
Not for children under 3 years.

InterPr Inc.
Tel. : 82 2 3672 7652
Fax. : 82 2 549 6755
E-mail : sales@scholas.co.kr
Homepage : www.scholas.co.kr
Address : 383-7 Norim-ri Buron-myeon,
Wonju-si, Kangwon-do, Korea 220-811

8 809071 371284

Made in Korea

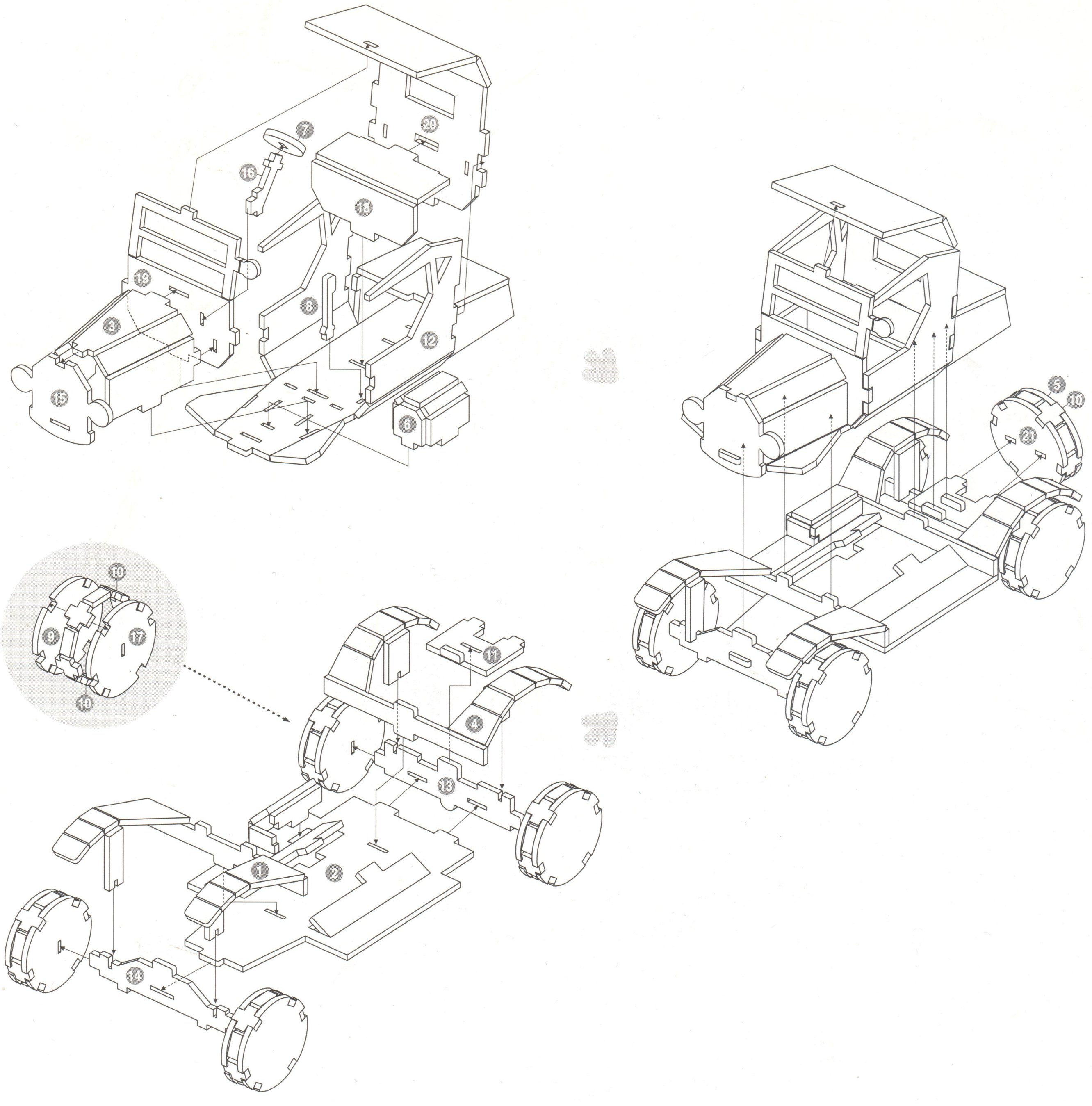

Ford Model T

The Ford Model T was an automobile produced by Henry Ford's Ford Motor Company from 1908 through 1927.
It is generally regarded as the first affordable automobile, the car which 'put America on wheels' ; this was due to some of Ford's innovations, including assembly line production instead of individual hand crafting, as well as the concept of paying the workers a wage proportionate to the cost of the car, so that they would provide a ready made market.

Specifications

Powerplant : 4–Cylindered engine, 20 hp(15kW)
Displacement : 2,900cc
Maximum speed : 68km/h (37mph)
Production : 1908 ~ 1927
Produced : 15,007,033

※ Instructions

Refer to the photograph on the front and join the pieces by matching the drawings on the back. After popping out the pieces, you can punch out the interlocking holes with the corners of the foam boards.

(Caution)

Please put the small leftover pieces into the garbage after finishing assembly. And be careful not to let your children eat or put our products or the packaging into their nose or ear.

SCHOLAS

InterPr Inc.
Tel : 02 3672 7652
Fax : 02 549 6755

http://www.scholas.co.kr
E-mail : sales@scholas.co.kr

3D Puzzle
POP Out World ®